Enclosure series aluNORM

Type: AH 202

Material-No.: 103.202.035

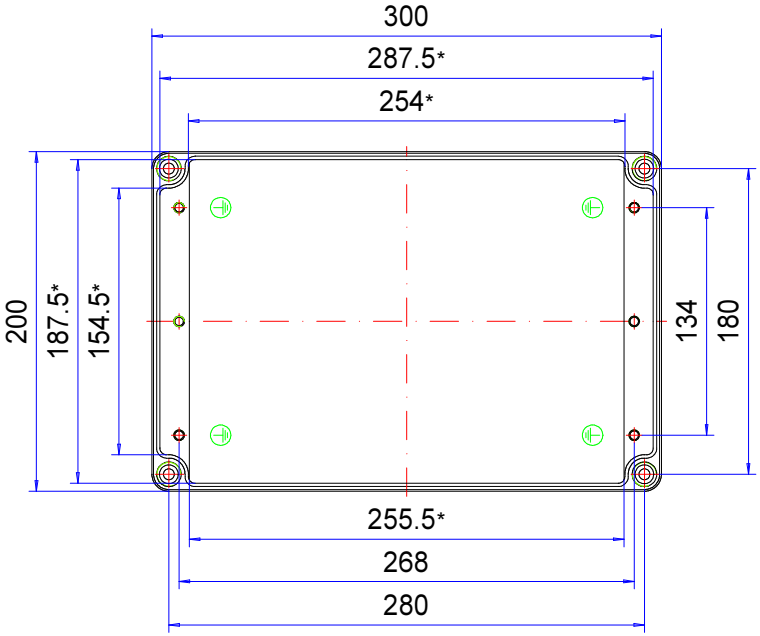

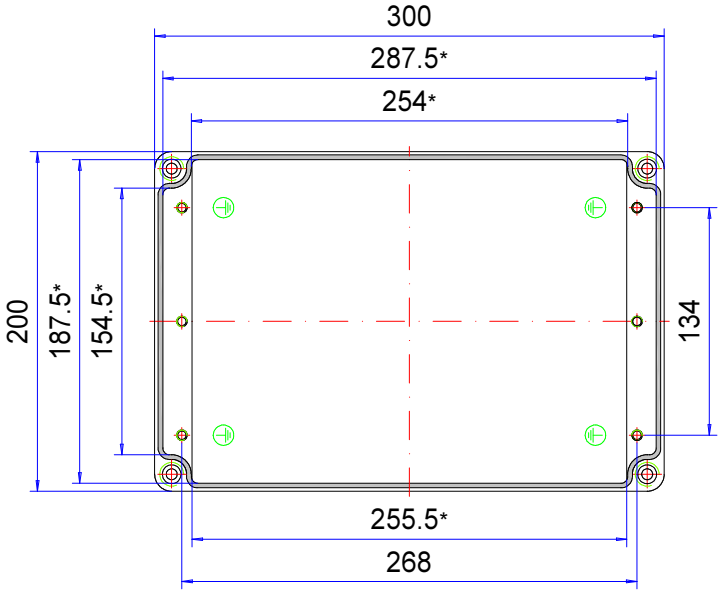

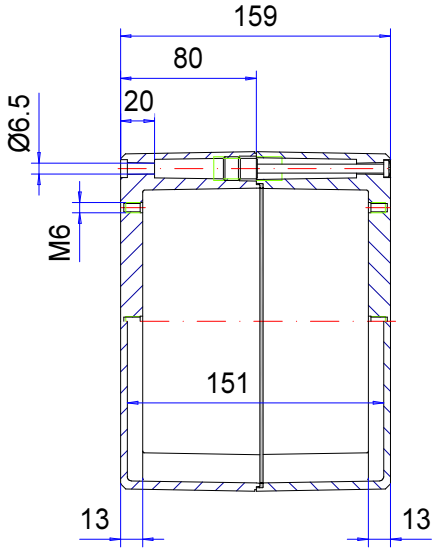

* Please note: Mould slope for casting ejection, dimensions in the amount of the bottom!

Enclosure material	GD-Al Si 12 (DIN 1725)		Weight	3.880 g
Lid screws	4x stainless steel 1.4567 (V2A), captive		Earthing screws	4x M6x9, copper-plated
Gasket	Dosed, PUR		Coating	Powder coating RAL 7035, light grey
Ingress protection	IP66 EN 60529		Tolerance	DIN CEN ISO/TS 8062-2 (outside dimensions ± 0,5mm)

technical changes subjected