Enclosure series aluFACE

Type: KCE 166

Material-No.: 119.166.000

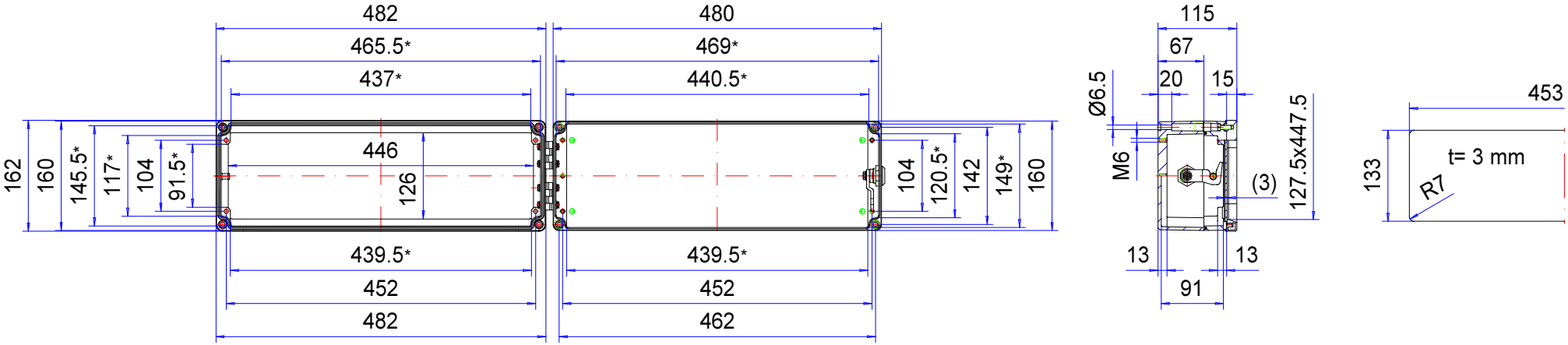

* Please note: Mould slope for casting ejection, dimensions in the amount of the bottom!

Enclosure material	GD-Al Si 12 (DIN 1725)		Weight	4.710 g
Closure	1x lock and 2x hinge		Earthing screws	4x M6x9, copper-plated
Gasket	Dosed, PUR		Coating	Powder coating RAL 7040, window grey +RAL 7035, light grey
Ingress protection	IP66 EN 60529		Tolerance	GTA 13/5 DIN 1688-4 (outside dimensions ±0,5mm)

technical changes subjected